There's something that appeals to everyone in

WESTERN'S

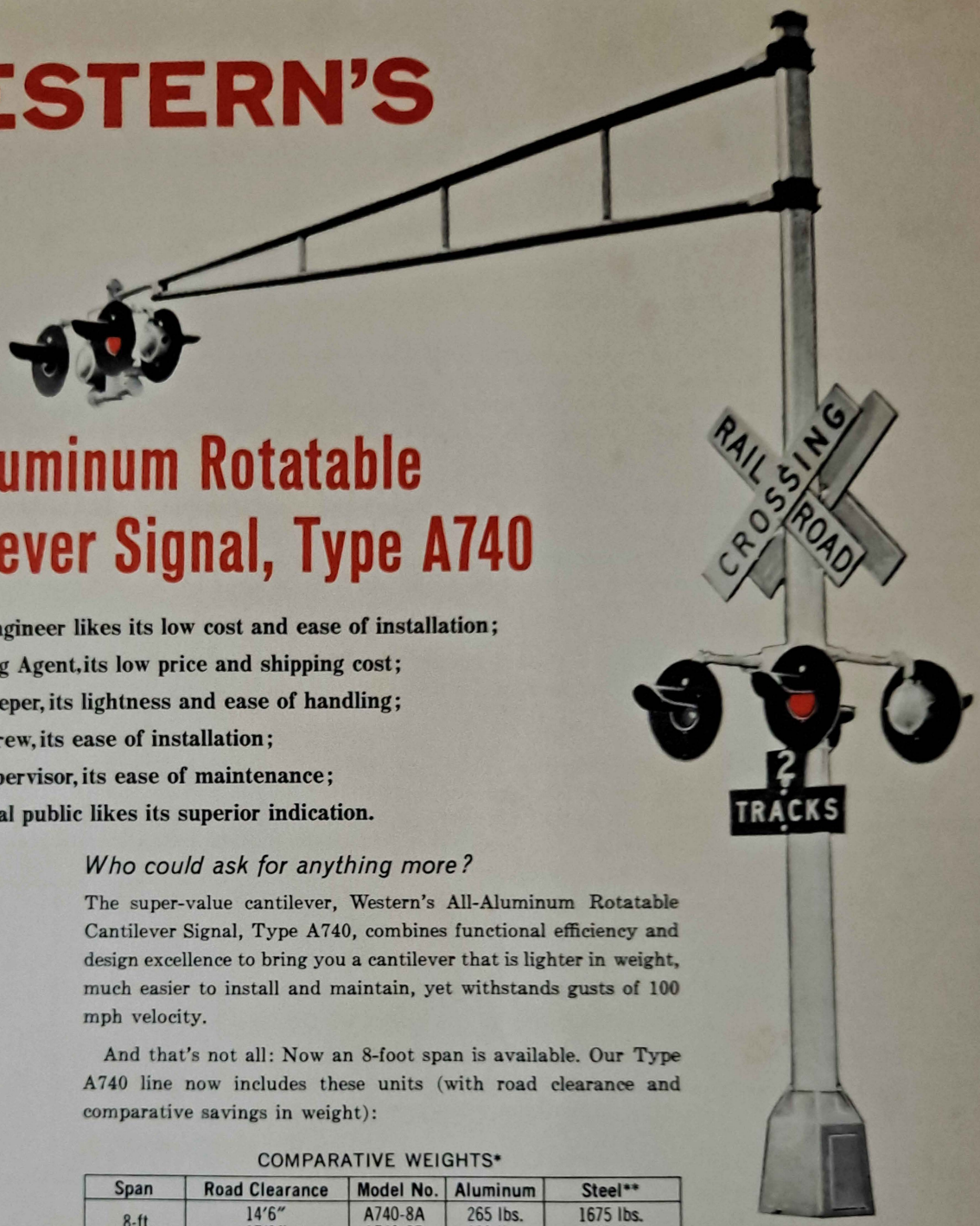

All-Aluminum Rotatable Cantilever Signal, Type A740

The Signal Engineer likes its low cost and ease of installation;
the Purchasing Agent, its low price and shipping cost;
the Stores Keeper, its lightness and ease of handling;
the erecting crew, its ease of installation;
the Signal Supervisor, its ease of maintenance;
and the general public likes its superior indication.

Who could ask for anything more?

The super-value cantilever, Western's All-Aluminum Rotatable Cantilever Signal, Type A740, combines functional efficiency and design excellence to bring you a cantilever that is lighter in weight, much easier to install and maintain, yet withstands gusts of 100 mph velocity.

And that's not all: Now an 8-foot span is available. Our Type A740 line now includes these units (with road clearance and comparative savings in weight):

COMPARATIVE WEIGHTS*

Span	Road Clearance	Model No.	Aluminum	Steel**
8-ft.	14′6″ 17′0″	A740-8A A740-8B	265 lbs. 280 lbs.	1675 lbs. 1700 lbs.
12-ft.	14′6″ 17′0″	A740-12A A740-12B	290 lbs. 305 lbs.	2210 lbs. 2250 lbs.
15-ft.	14′6″ 17′0″	A740-15A A740-15B	310 lbs. 325 lbs.	2315 lbs. 2380 lbs.
20-ft.	14′6″ 17′0″	A740-20A A740-20B	390 lbs. 410 lbs.	Not Furnished Not Furnished

* Approximate for structure only. ** Fixed span.

Would you like drawings and detailed information? . . . Please contact us:

WESTERN RAILROAD SUPPLY COMPANY
Division of Western Industries, Inc.
2742 West 36th Place · Chicago, Illinois 60632
CANADA: Lyman Tube & Supply Company, Ltd., 5420 Pare St. Montreal 9, Quebec

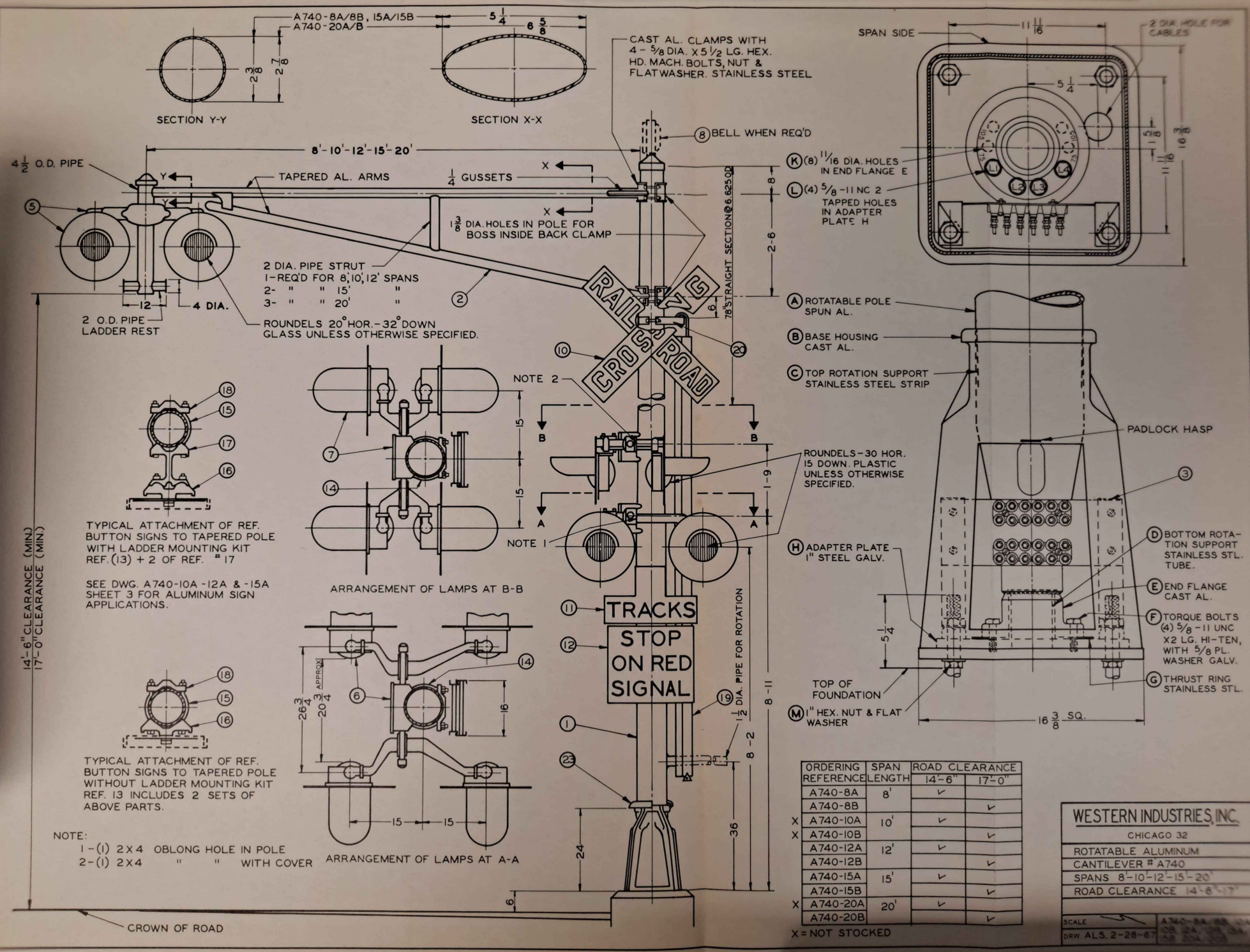

ORDERING REFERENCE	SPAN LENGTH	ROAD CLEARANCE 14'-6"	ROAD CLEARANCE 17'-0"
A740-8A	8'	✓	
A740-8B			✓
X A740-10A	10'	✓	
X A740-10B			✓
A740-12A	12'	✓	
A740-12B			✓
A740-15A	15'	✓	
A740-15B			✓
X A740-20A	20'	✓	
A740-20B			✓

X = NOT STOCKED

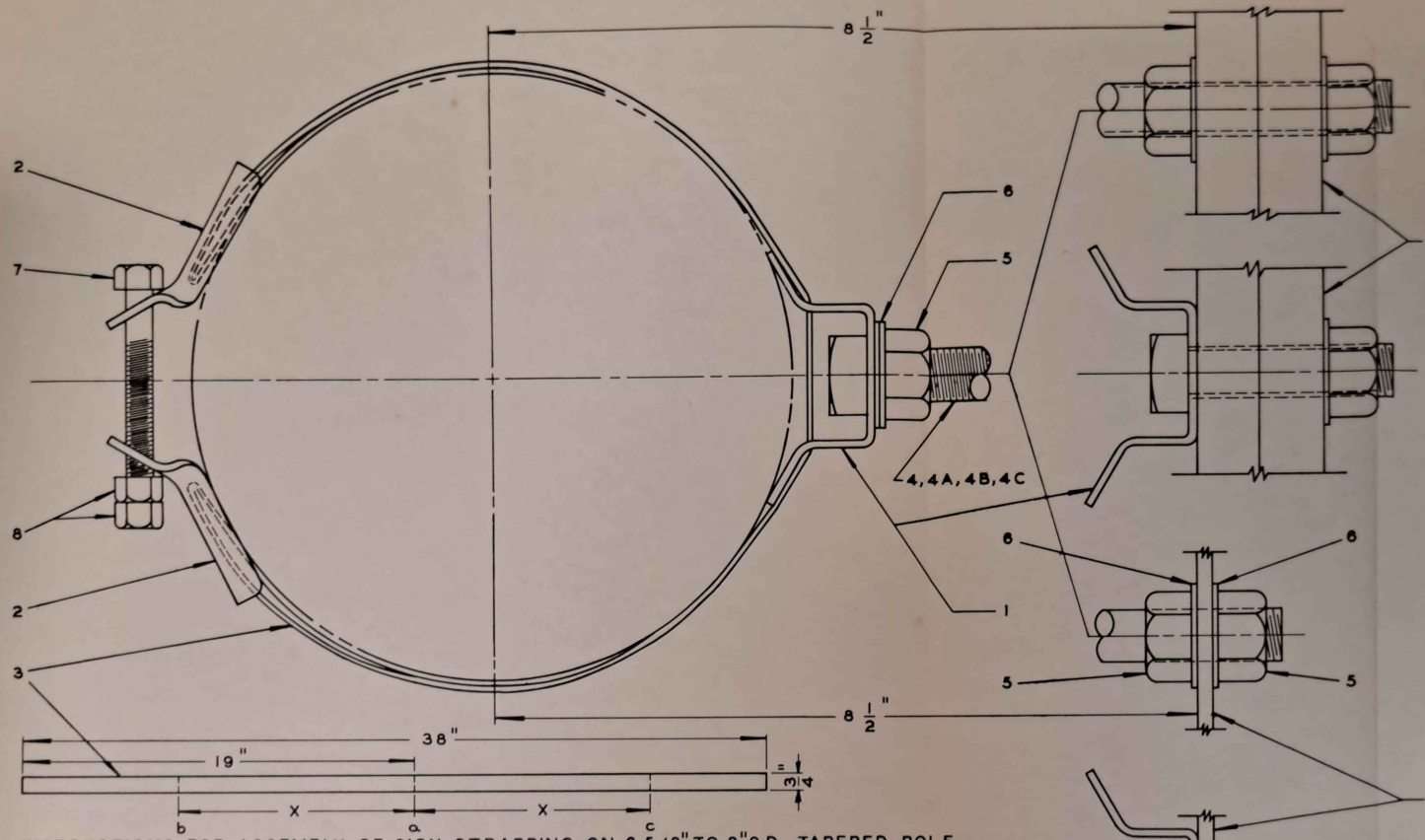

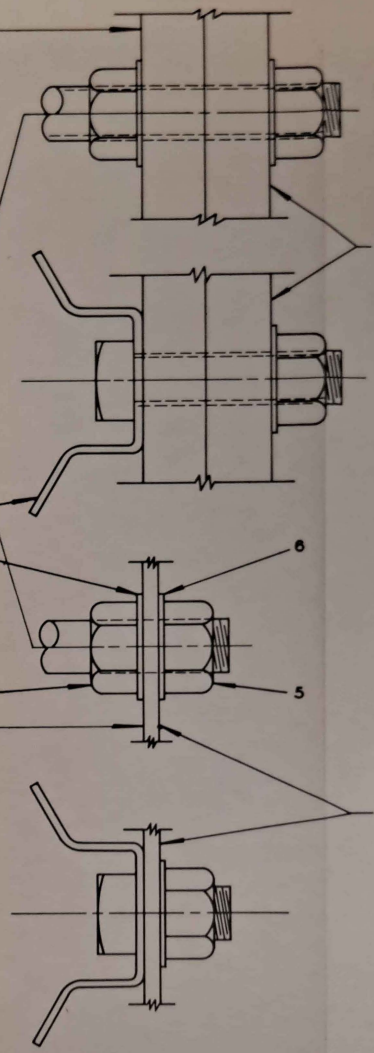

FIG."A"
FOR USE WITH RR CROSSING SIGN ON POLE EQUIPPED WITH LADDER BRACKETS.

SIGN #3380-7L REF. 10A

FIG."C"
FOR USE WITH RR CROSSING SIGN ON POLE WITHOUT LADDER BRACKETS.

FIG."B"
FOR USE WITH STOP ON RED SIGNAL AND TRACKS SIGNS WITH LADDER BRACKETS.

STOP ON RED SIGNAL SIGN #3368-7L REF. 12A & TRACKS SIGN #3368-7L REF. 11A

FIG."D"
FOR USE WITH STOP ON RED SIGNAL AND TRACKS SIGNS WITHOUT LADDER BRACKETS.

INSTRUCTIONS FOR ASSEMBLY OF SIGN STRAPPING ON 6 5/8" TO 8" O.D. TAPERED POLE

X = 1/2 CIRCUMFERENCE OF POLE AT POINT OF ATTACHMENT MINUS 1/2"
A-MEASURE CIRCUMFERENCE OF POLE AND MARK OFF POINTS a,b & c ON STRAP.
B-ASSEMBLE 5/8" D. BOLT REF. 4 TO STAND-OFF REF. (1)
C-ASSEMBLE (1) STAND-OFF REF. (1) & (2) BUCKLES REF. (2) TO STRAP
D-BEND STRAP BACK OVER BUCKLE AT POINTS b & c HAMMER FLAT.
E-WRAP STRAP AROUND POLE AND DRAW TIGHT WITH 5/16" BOLT REF. 7

HINT:
APPLY ASSEMBLED STRAP TO POLE HIGHER THAN FINAL POSITON
ENGAGE BOLT REF. 7 AND THEN LOWER TO DESIRED POSITION

REF.	DESCRIPTION	MATERIAL	PIECE NO.	REQ'D. FOR FIG. A	" " " B	" " " C	" " " D	REMARKS
1	STAND-OFF	STAINLESS	3364-55	2	2	2	2	
2	BUCKLE	STL. CAD. PLT.	3364-56	4	4	4	4	
3	3/4"-(.030)" STRAP X 38" LG.	STAINLESS	3364-57	2	2	2	2	
4	5/8"-11X6" LG. SQ. HD. BOLT (FULL THREAD)	"	3364-58	2	-	-	-	
4A	5/8"-11X4 1/2" LG. SQ. HD. BOLT (FULL THREAD)	"	3364-59	-	2	-	-	
4B	5/8"-11X2 1/2" LG. " " " " "	"	3364-60	-	-	2	-	
4C	5/8"-11X1" LG. " " " " "	"		-	-	-	2	
5	5/8"-11 HEX. NUT	"		6	6	2	2	
6	5/8" PLATE WASHER	"		8	8	2	2	
7	5/16"-18 x 2 1/4" HEX. HD. BOLT	"		2	2	2	2	
8	5/16"-18 HEX. NUT	"		4	4	4	4	

WESTERN INDUSTRIES, INC.
CHICAGO 32

APPLICATION OF ALUMINUM SIGNS WITH STRAP TYPE SUPPORTS TO TAPERED POLE

SCALE: 12"=1'-0" | A740-8A/8B, 10A/10B, 12A/12B, 13A/15B, 20A/20B
DWG: LG. 3-16-67

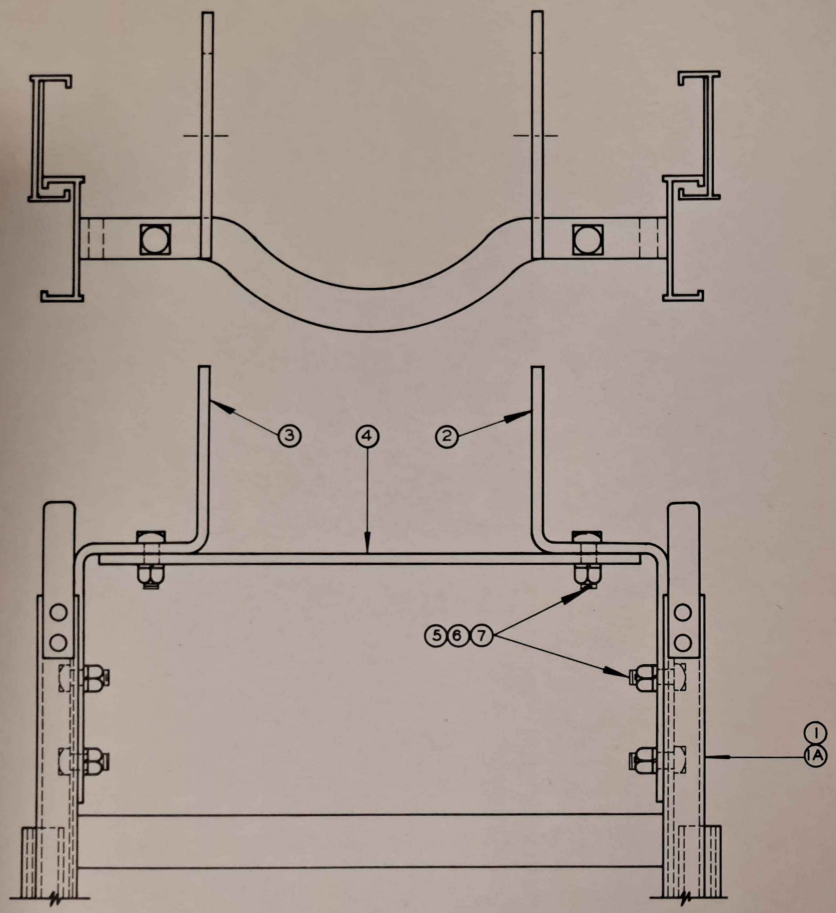

NOTE:
6540-22K KIT CONSISTS OF
ITEMS #2, 3, 4, 5, 6 & 7

TO BE SHIPPED AS: (1) LADDER ONLY #6540-32AM OR -32BM
(1) KIT #6540-22K

ITEM	DESCRIPTION	MATERIAL	DWG. NO.	6540-20 NO. REQ'D.	6540-24 NO. REQ'D.
1	20' EXTENSION LADDER FOR 14'-6" CLEAR.	AL.	6540-32AM	1	0
1A	24' EXTENSION LADDER FOR 17'-0" CLEAR.	AL.	6540-32BM	0	1
2	LADDER HOOK R.H.	ST. STL.	6540-33RM	1	1
3	LADDER HOOK L.H.	" "	6540-33LM	1	1
4	STRAP	" "	6540-34M	1	1
5	3/8"-16 × 1" LG. SQ. HD. BOLT	" "		6	6
6	3/8"-16 HEX. NUT	" "		6	6
7	3/8" SPRING LOCK WASHER	" "		6	6

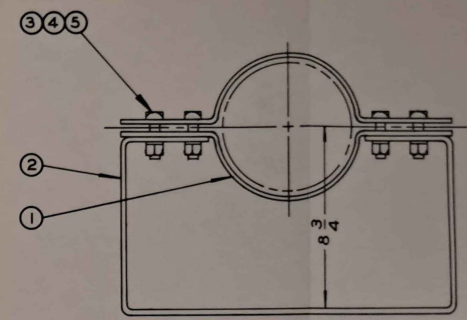

UPPER LADDER SUPPORT 6540-23
FURNISHED WHEN LADDER IS ORDERED

ITEM	DESCRIPTION	MATERIAL	DWG. NO.	NO. REQ'D.
1	PIPE CLAMP FOR 6" PIPE	ALUM.	6540-23-1	2
2	LADDER HANGER	ALUM.	6540-23-2	1
3	1/2"-13 × 2 1/4" SQ. HD. BOLT	ST. STL.		4
4	1/2"-13 HEX. NUT	" "		4
5	1/2" SPRING LOCK WASHER	" "		4

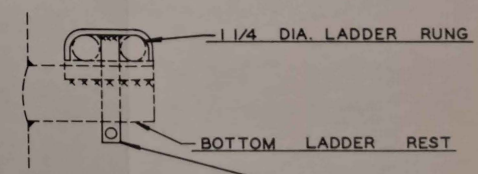

LADDER LOCK BRACKET 6540-30A
FURNISHED WHEN LADDER IS ORDERED

WESTERN INDUSTRIES, INC.
CHICAGO 32

EXTENSION LADDER
ASS'Y AND MOUNTING
DETAILS FOR A740
CANTILEVER

SCALE: 6" = 1'-0" | 6540-20/24
DRW. L.M.G. 2-28-67 | 6540-23/30A

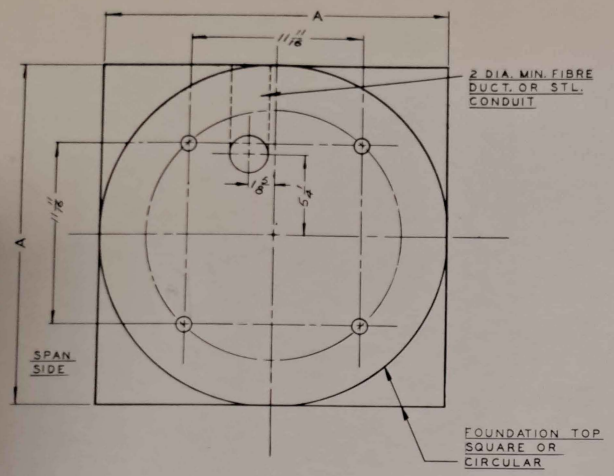

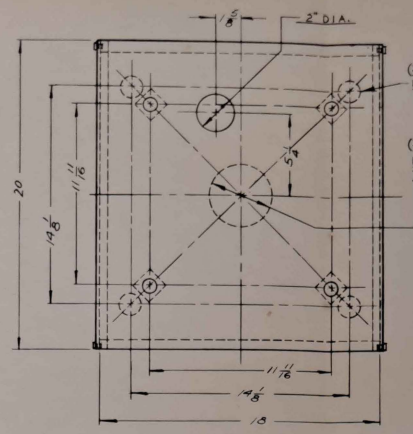

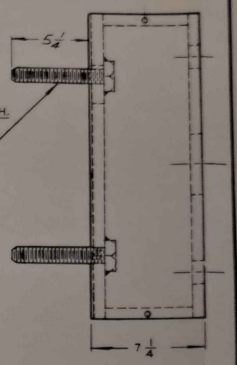

SUB BASE 6540-50 (STL. GALV.) FOR USE ON EXISTING FOUNDATIONS WITH 14 1/8"x14 1/8" BOLT SPACING

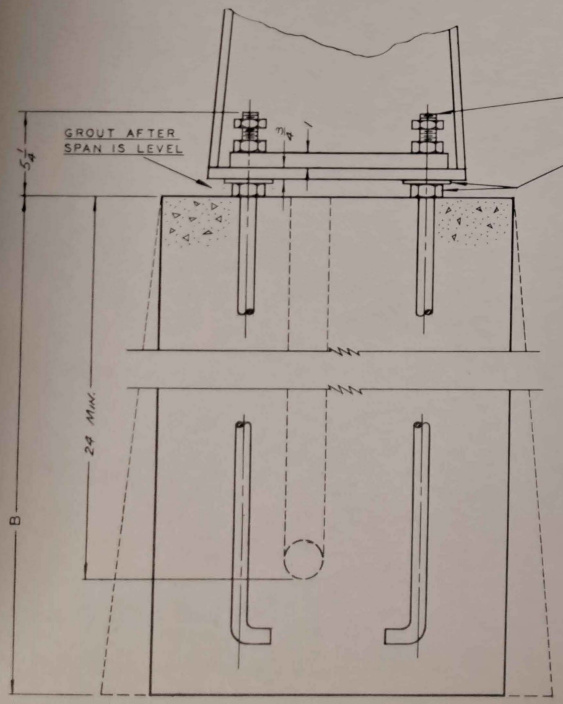

(4) BOLTS C WITH 2 REG. HEX. NUTS (1) JAM HEX. NUT & (1) PL. WASHER SEE REF 4, 4A, 4B, DWG. A740-8A/8B-20A/20B

REQ'D WHEN LEVELING NUTS ARE USED. IF LEVELING NUTS ARE NOT USED: 5 1/4 DIMENSION SHOULD BE 4 1/8 MIN. AAR FDN. DWGS 1107 & 1560 SHOW BOLT EXTENDING ONLY 3 1/4 ABOVE TOP OF FOUNDATION.

MINIMUM DIMENSIONS OF FOUNDATION & FOUNDATION BOLTS

SPAN LENGTH	A DIM.	B DIM.	C BOLT LENGTH
8'	22"	6'	42"
10'			
12'			
15'			
20'	27"	7'	60"

DESIGN CONDITIONS

1. CONCRETE, 3200 PSI MIN. STRENGTH IN 28 DAYS
2. UNDISTURBED SOIL -- SHOULD NOT BE FRESH FILL. (REMOVE ANY SAFETY CRIBBING DURING POUR)
3. RESISTING MOMENT OF FOUNDATION IS EQUAL TO OR GREATER THAN THAT OF THE POLE AT YIELD STRESS, (48,000 PSI STEEL AND 25,000 PSI ALUMINUM)
4. MEDIUM CLAY SOIL WHOSE VALUES ARE: a = 4,000 AND b = 40. ASSUME N = 1.

WESTERN INDUSTRIES, INC.
CHICAGO 32

CONCRETE FOUNDATION FOR A740 CANTILEVER SIGNAL

SCALE 1/4" = 1" | DRW. L.G. 3-8-87 | A740-20

WESTERN INDUSTRIES, INC.
CHICAGO 32

CONCRETE FOUNDATION FOR A740 CANTILEVER SIGNAL

SCALE 1/4" = 1" | DRW. L.G. 3-8-87 | A740-20